Power Board

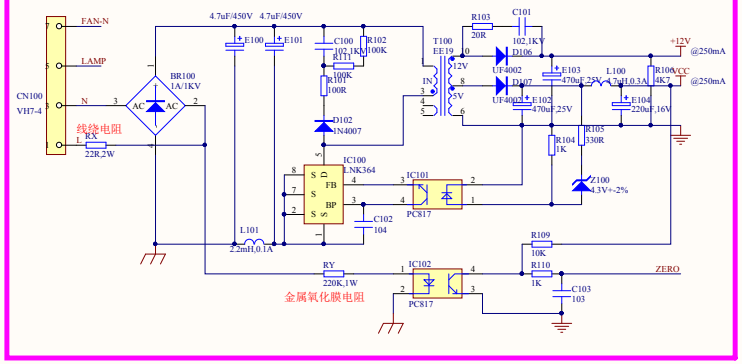

Buzzer

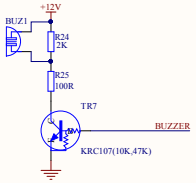

DISPLAY

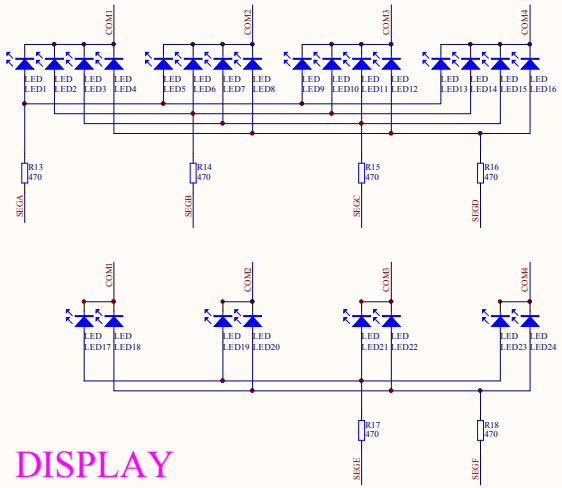

RELAY

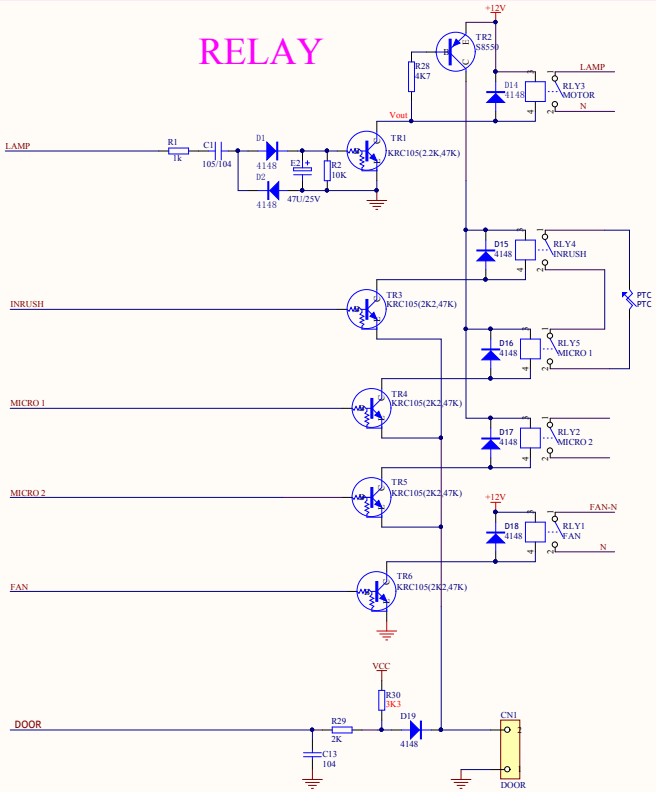

MCU

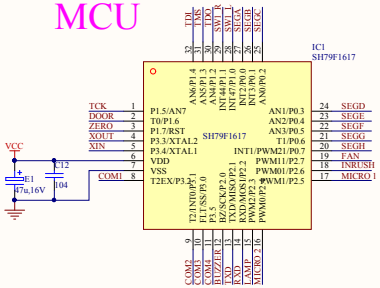

KEY

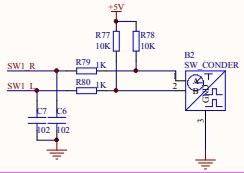

OCD

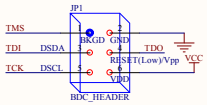

Model Switch

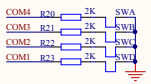

预留，不安装OSC1,C10,C11，R3
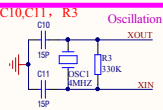
Oscillation